University of San Carlos | Department of
COMPUTER ENGINEERING

CpE 3201
Embedded Systems

Interfacing Displaytech 204A LCD

About the Displaytech 204A

Item	Contents	Unit
LCD type	TN / STN / FSTN	---
LCD duty	1/16	---
LCD bias	1/5	---
Viewing direction	6 / 12	o'clock
Module size (W×H×T)	98 × 60 × 11.0 MAX (14.0 MAX W/LED BACKLIGHT)	mm
Viewing area (W×H)	76 × 25.2	mm
Number of characters (characters×lines)	20 × 4	---
Character matrix (W×H)	5 × 8	dots
Character size (W×H)	2.95 × 4.75	mm
Dot size (W×H)	0.55 × 0.55	mm
Dot pitch (W×H)	0.60 × 0.60	mm

External Dimensions

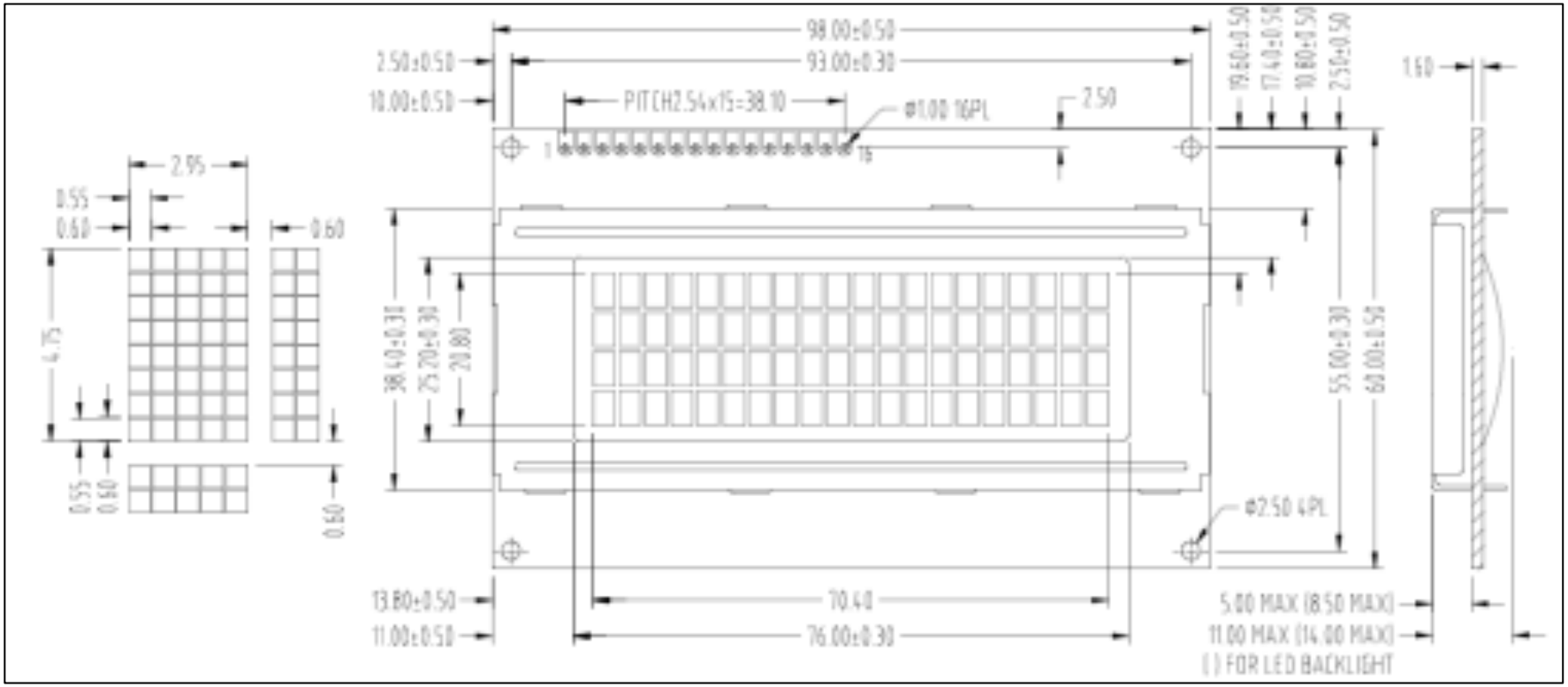

Actual Picture (Reverse Contrast Type)

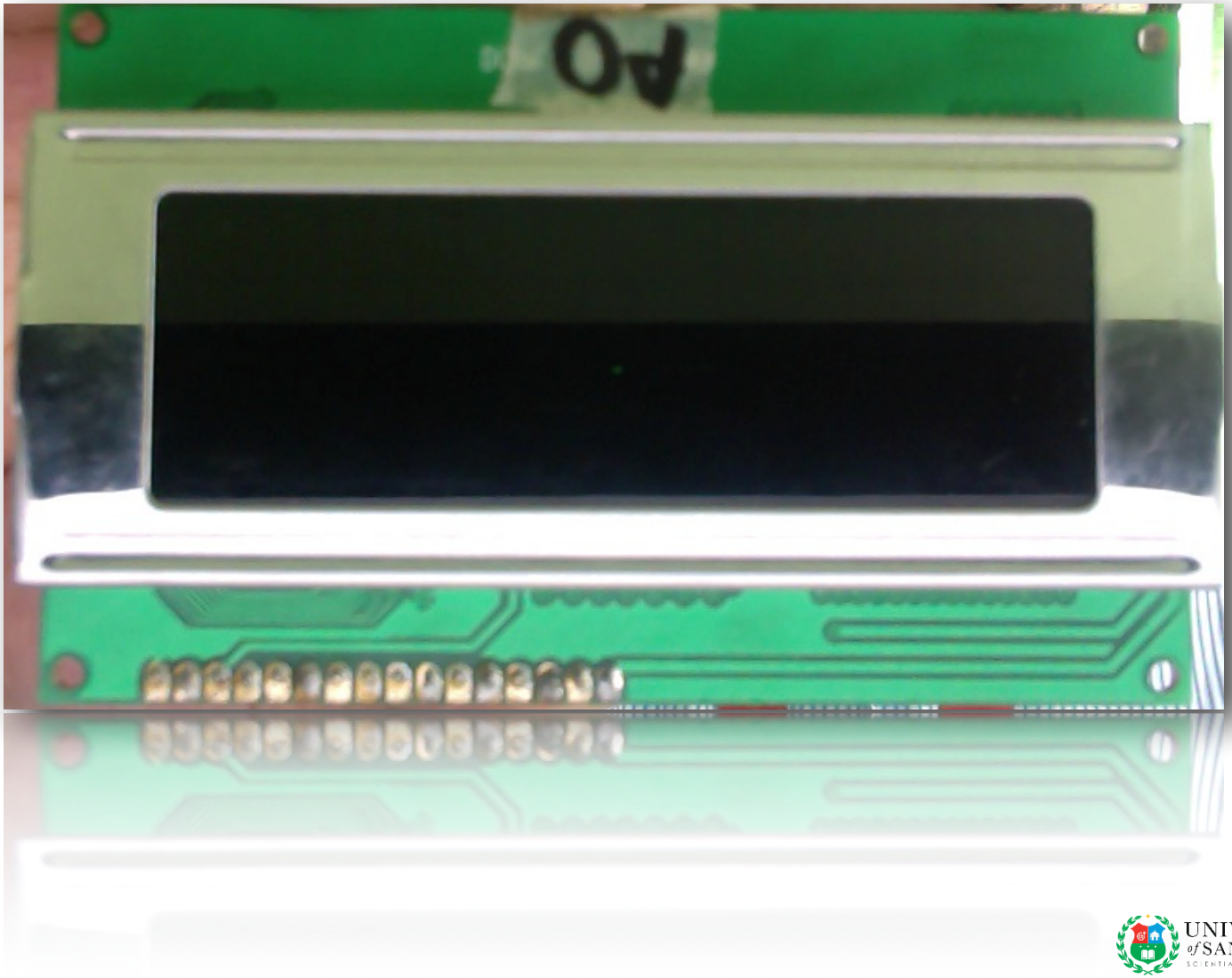

Block Diagram

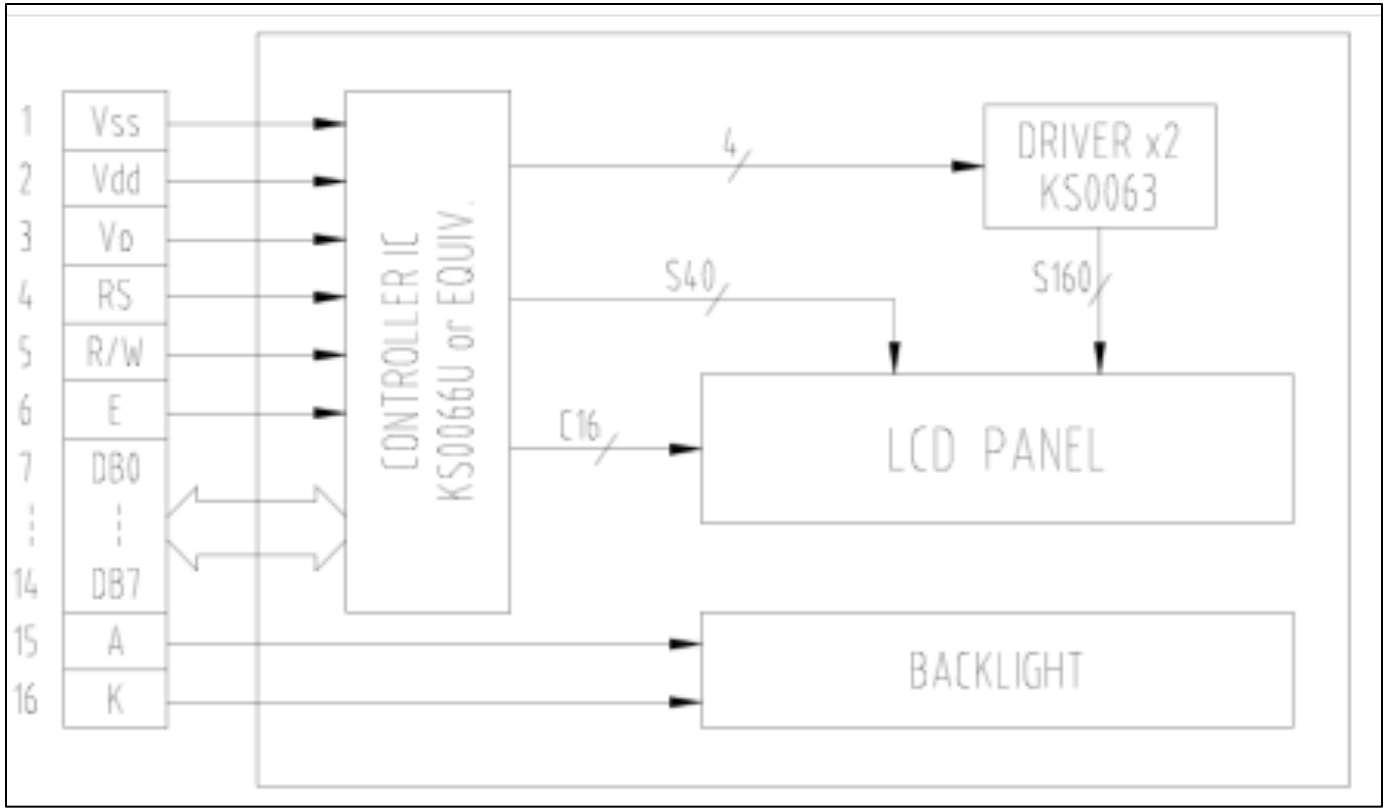

Interface Signals

Pin NO.	Symbol	Level	Description
1	VSS	0V	Ground
2	VDD	5.0V	Supply voltage for logic
3	VO	---	Input voltage for LCD
4	RS	H/L	H : Data signal, L : Instruction signal
5	R/W	H/L	H : Read mode, L : Write mode
6	E	H, H → L	Enable signal for KS0076
7	DB0	H/L	Data bit 0
8	DB1	H/L	Data bit 1
9	DB2	H/L	Data bit 2
10	DB3	H/L	Data bit 3
11	DB4	H/L	Data bit 4
12	DB5	H/L	Data bit 5
13	DB6	H/L	Data bit 6
14	DB7	H/L	Data bit 7
15	A	---	Back light anode
16	K	---	Back light cathode

Registers

- *Instruction Register (IR)*
  - stores instruction codes such as “clear display” or “shift cursor” and also stores address information for the display data RAM
- *Data Register*
  - is used for temporarily storing data during data transactions with the MCU

Registers

- *Busy Flag (BF)*
  - When the busy flag is set at a logical "1", the LCD unit is executing an internal operation, and no instruction will be accepted
- *Address Counter (AC)*
  - *The address counter generates the address for the display data RAM and character generator RAM*

Registers

- *Display Data RAM (DD RAM)*
  - This 80 x 8 bit RAM stores up to 80 8-bit character codes as display data

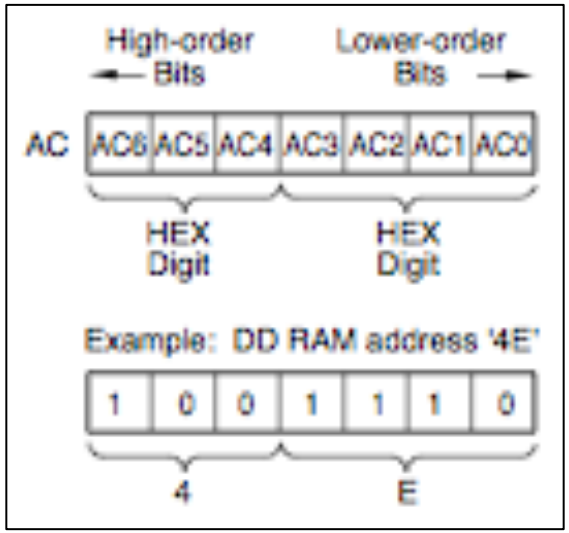

Registers

- *Character Generator ROM (CG ROM)*
  - This ROM generates a 5 × 7 dot-matrix character pattern for each of 160 different 8-bit character codes
- *Character Generator RAM (CG RAM)*
  - This RAM stores eight arbitrary 5 x 7 dot-matrix character patterns, as programmed by the user

HIGH-ORDER 4 BIT / LOW-ORDER 4 BIT	0000	0010	0011	0100	0101	0110	0111	1010	1011	1100	1101	1110	1111
xxxx0000	CG RAM (1)		0	@	P	`	p		ー	タ	ミ	α	p
xxxx0001	(2)	!	1	A	Q	a	q	。	ア	チ	ム	ä	q
xxxx0010	(3)	"	2	B	R	b	r	「	イ	ツ	メ	ß	θ
xxxx0011	(4)	#	3	C	S	c	s	」	ウ	テ	モ	ε	∞
xxxx0100	(5)	$	4	D	T	d	t	、	エ	ト	ヤ	μ	Ω
xxx0101	(6)	%	5	E	U	e	u	・	オ	ナ	ユ	σ	ü
xxx0110	(7)	&	6	F	V	f	v	ヲ	カ	ニ	ヨ	ρ	Σ
xxxx0111	(8)	'	7	G	W	g	w	ァ	キ	ヌ	ラ	g	π
xxxx1000	(1)	(	8	H	X	h	x	ィ	ク	ネ	リ	√	x̄
xxxx1001	(2)	)	9	I	Y	i	y	ゥ	ケ	ノ	ル	¹	y
xxxx1010	(3)	*	:	J	Z	j	z	ェ	コ	ハ	レ	j	¥
xxxx1011	(4)	+	;	K	[	k	{	ォ	サ	ヒ	ロ	ˣ	万
xxxx1100	(5)	,	<	L	¥	l	|	ャ	シ	フ	ワ	¢	円
xxxx1101	(6)	-	=	M	]	m	}	ュ	ス	ヘ	ン	£	÷
xxxx1110	(7)	.	>	N	^	n	→	ョ	セ	ホ	゛	ñ	
xxxx1111	(8)	/	?	O	_	o	←	ッ	ソ	マ	゜	ö	▒

Character Codes

MCU Interface

- The LCD unit performs either dual 4-bit or single 8-bit data transfers, allowing the user to interface with either a 4-bit or 8-bit microprocessor
- *4-Bit Microprocessor Interface.*
  - Data lines DB4 - DB7 are used for data transfers. Data transactions with the external microprocessor take place in two 4-bit data transfer operations.

MCU Interface

- *8-bit Microprocessor Interface*
  - Each 8-bit piece of data is transferred in a single operation using the entire data bus DB0 - DB7.

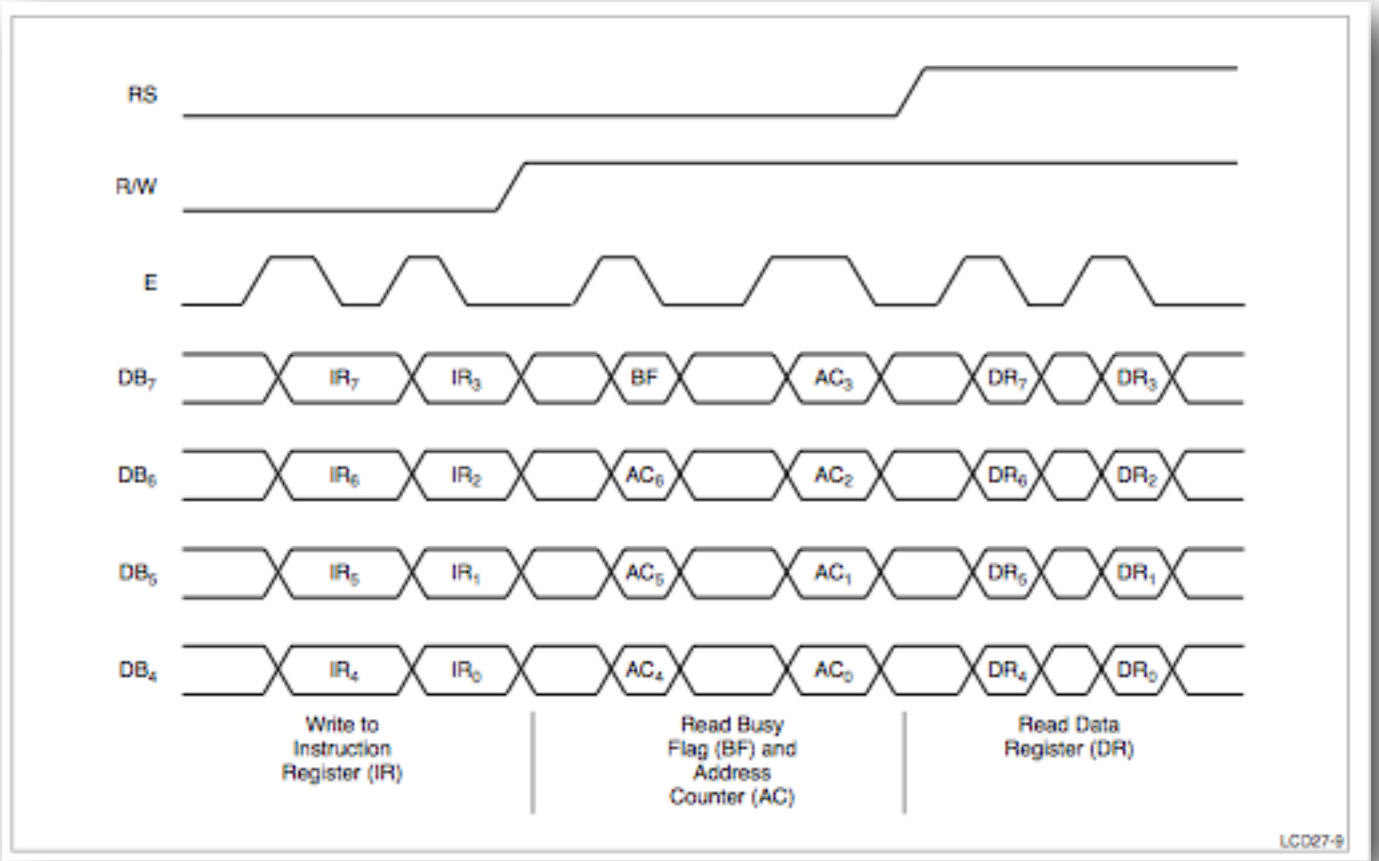

4-bit Data Transfer

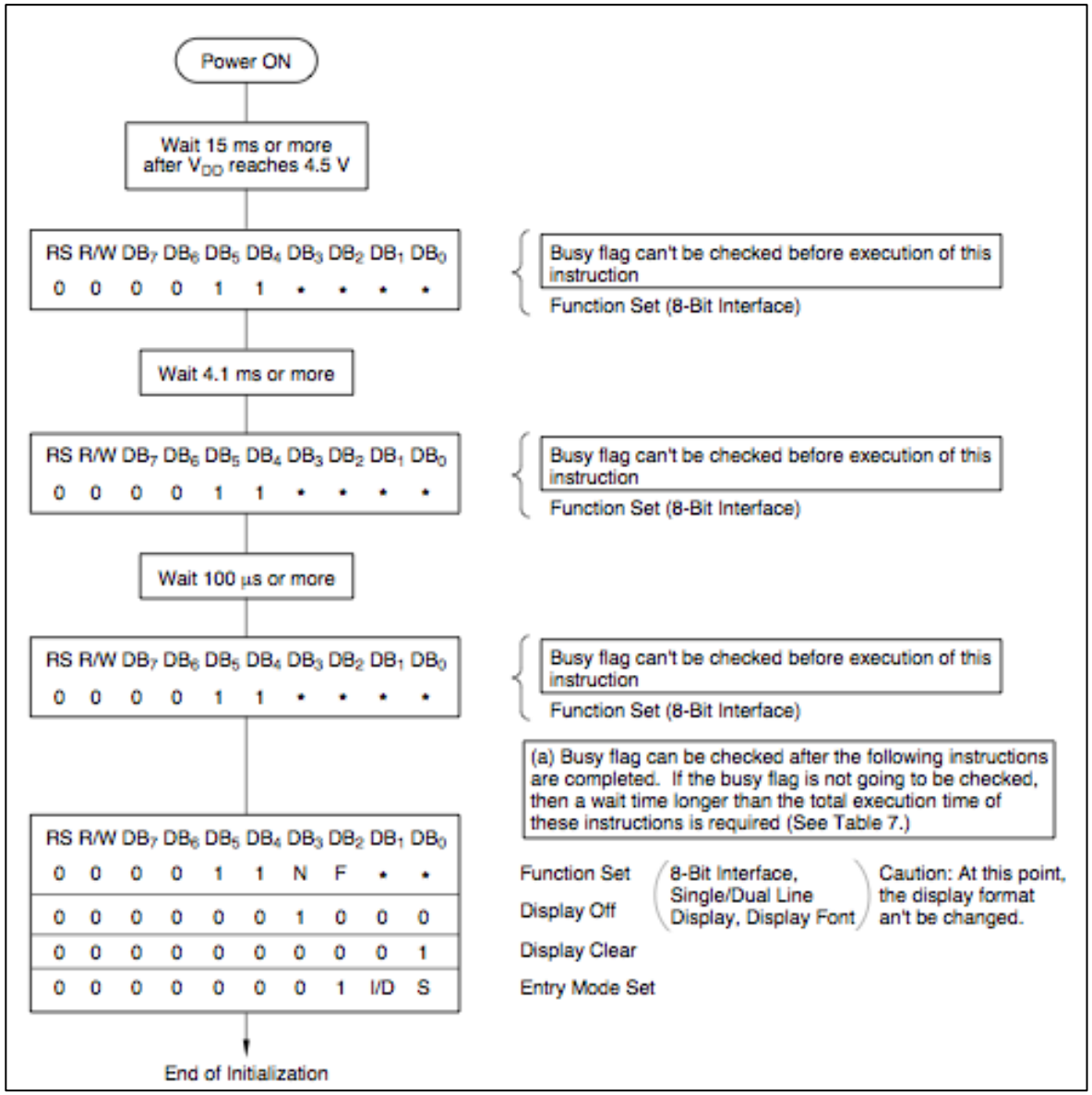

Initialization by Instruction 8-bit Interface

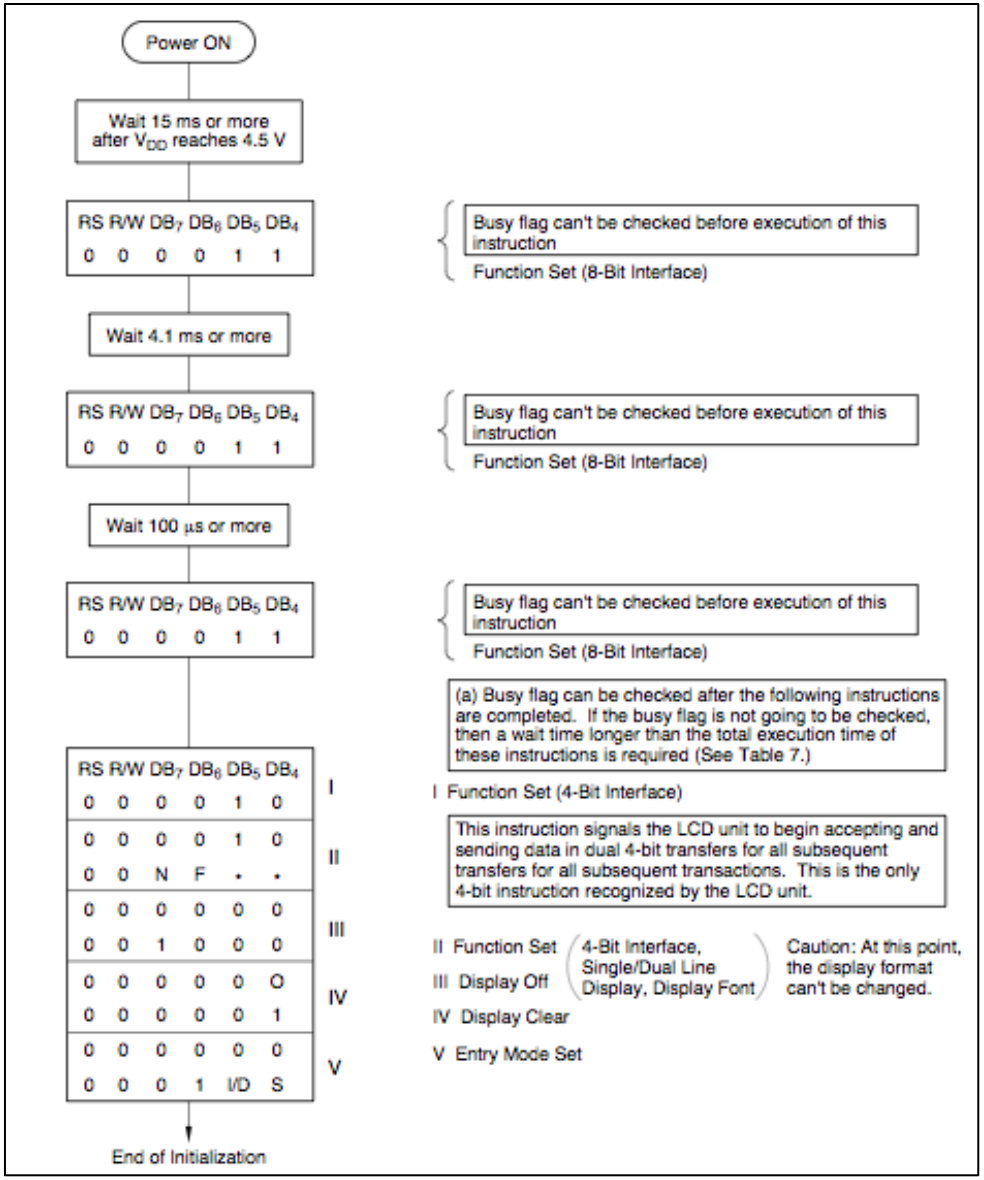

Initialization by Instruction 4-bit Interface

Instruction Set

INSTRUCTION	CODE										FUNCTION	EXECUTION TIME (max) (f_{CP} or f_{OSC} = 250 kHz)
	RS	R/W	DB_7	DB_6	DB_5	DB_4	DB_3	DB_2	DB_1	DB_0		
Display Clear	0	0	0	0	0	0	0	0	0	1	Clear entire display area, restore display from shift, and load address counter with DD RAM address 00_H.	1.64 ms
Display/Cursor Home	0	0	0	0	0	0	0	0	1	*	Restore display from shift and load address counter with DD RAM address 00_H.	1.64 ms
Entry Mode Set	0	0	0	0	0	0	0	1	I/D	S	Specify cursor advance direction and display shift mode. This operation takes place after each data transfer.	40 µs
Display ON/OFF	0	0	0	0	0	0	1	D	C	B	Specify activation of display (D), cursor (C), and blinking of character at cursor position (B).	40 µs
Display/Cursor Shift	0	0	0	0	0	1	S/C	R/L	*	*	Shift display or move cursor.	40 µs
Function Set	0	0	0	0	1	DL	N	0	*	*	Set interface data length (DL) and number of display lines (N).	40 µs
CG RAM Address Set	0	0	0	1	A_{CG}						Load the address counter with a CG RAM address. Subsequent data is CG RAM data.	40 µs
DD RAM Address Set	0	0	1	A_{DD}							Load the address counter with a DD RAM address. Subsequent data is DD RAM data.	40 µs
Busy Flag/Address Counter Read	0	1	BF	AC							Read busy flag (BF) and contents of address counter (AC).	0 µs
CG RAM/DD RAM Data Write	1	0	Write data								Write data to CG RAM or DD RAM.	40 µs
CG RAM/DD RAM Data Read	1	1	Read data								Read data from CG RAM or DD RAM.	40 µs
	I/D = 1: Increment, I/D = 0: Decrement S = 1: Display Shift On S/C = 1: Shift Display, S/C = 0: Move Cursor R/L = 1: Shift Right, R/L = 0: Shift Left DL = 1: 8-Bit, DL = 0: 4-Bit N = 1: Dual Line, N = 0: Single Line BF = 1: Internal Operation, BF = 0: Ready for Instruction										DD RAM: Display Data RAM CG RAM: Character Generator RAM A_{CG}: Character Generator RAM Address A_{DD}: Display Data RAM Address AC: Address Counter	

Write Operation Timing Characteristics

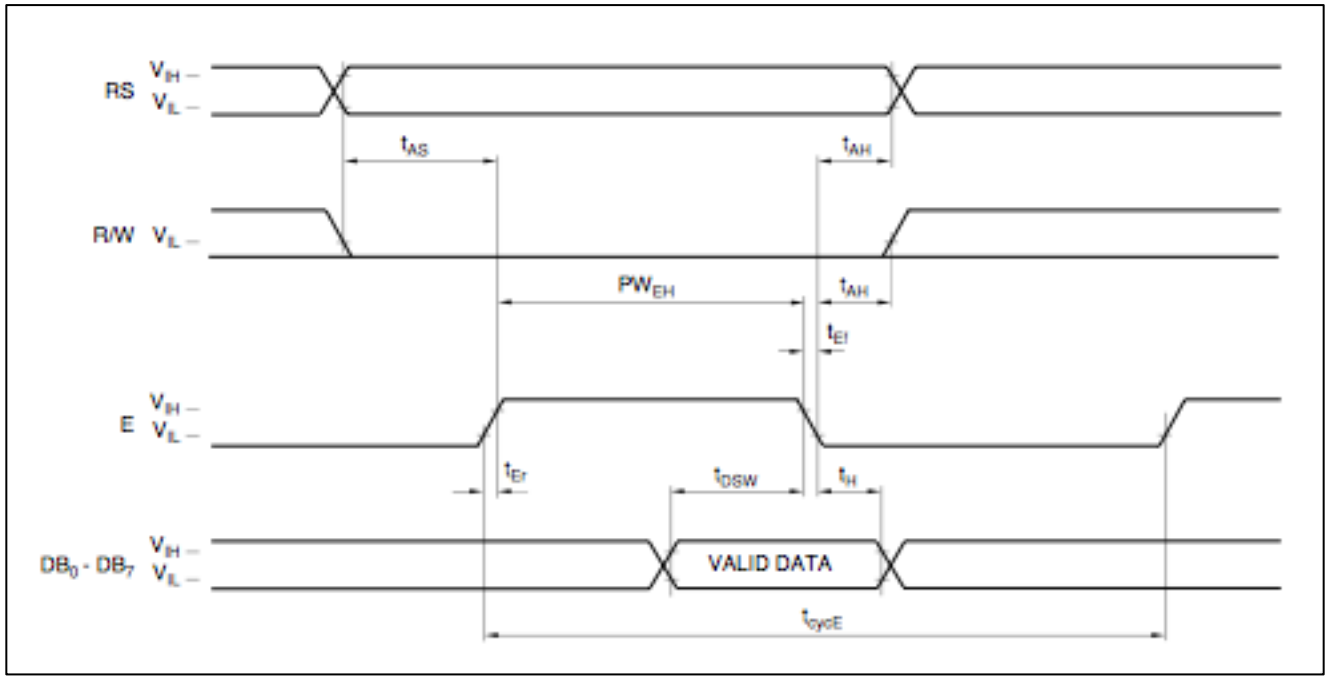

PARAMETER		SYMBOL	VALUE		UNIT
			MIN.	MAX.	
Enable Cycle Time		$t_{CYC}E$	1000	—	ns
Enable Pulse Width	"High" Level	PW_{EH}	450	—	ns
Enable Rise/Fall Time		t_{Er}, t_{Ef}	—	25	ns
Setup Time	RS, R/W-E	t_{AS}	140	—	ns
Address Hold Time		t_{AH}	10	—	ns
Data Setup Time		t_{DSW}	195	—	ns
Data Hold Time		t_H	10	—	ns

Read Operation Timing Characteristics

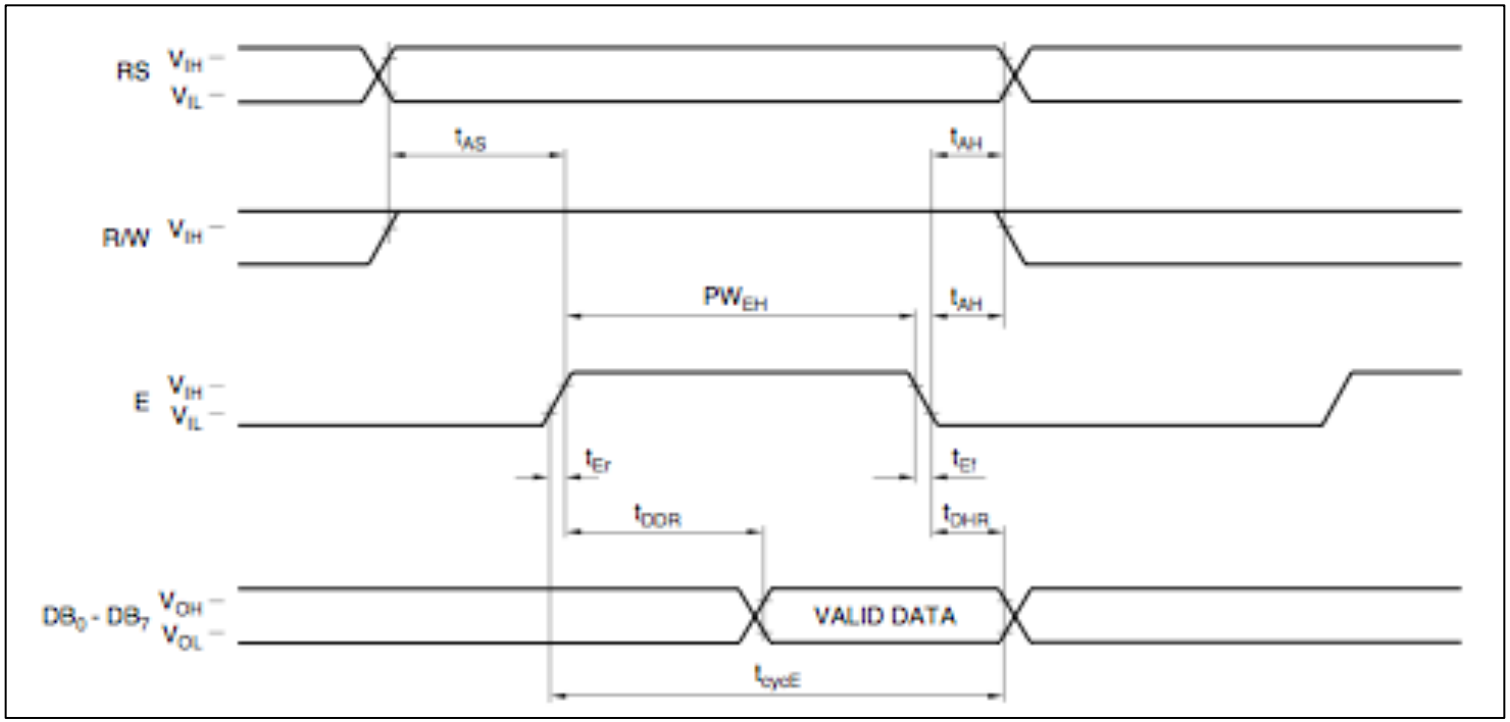

PARAMETER		SYMBOL	VALUE		UNIT
			MIN.	MAX.	
Enable Cycle Time		t_{cycE}	1000	—	ns
Enable Pulse Width	"High" Level	PW_{EH}	450	—	ns
Enable Rise/Fall Time		t_{Er}, t_{Ef}	—	25	ns
Setup Time	RS, R/W-E	t_{AS}	140	—	ns
Address Hold Time		t_{AH}	10	—	ns
Data Delay Time		t_{DDR}	—	320	ns
Data Hold Time		t_{DHR}	20	—	ns

Interfacing LCD to PIC16F877A

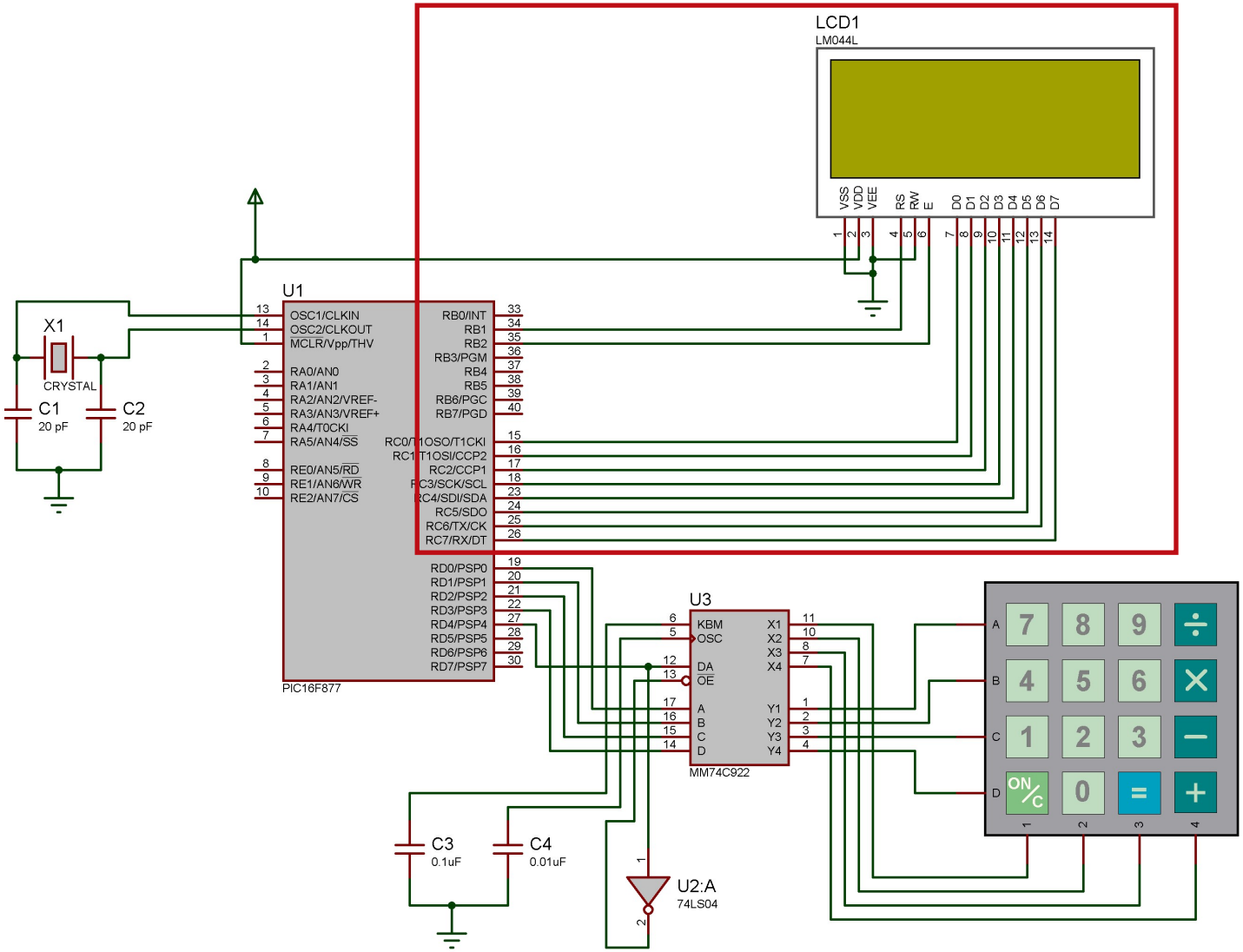

Programming

- Step 1: Write a function to send **Instructions** to LCD - **instCtrl()**
- Step 2: Write a function to Initialize LCD - **initLCD()**
- Step 3: Write a function to send **Data** to LCD - **dataCtrl()**
- Step 4: Write a function to display a string to LCD

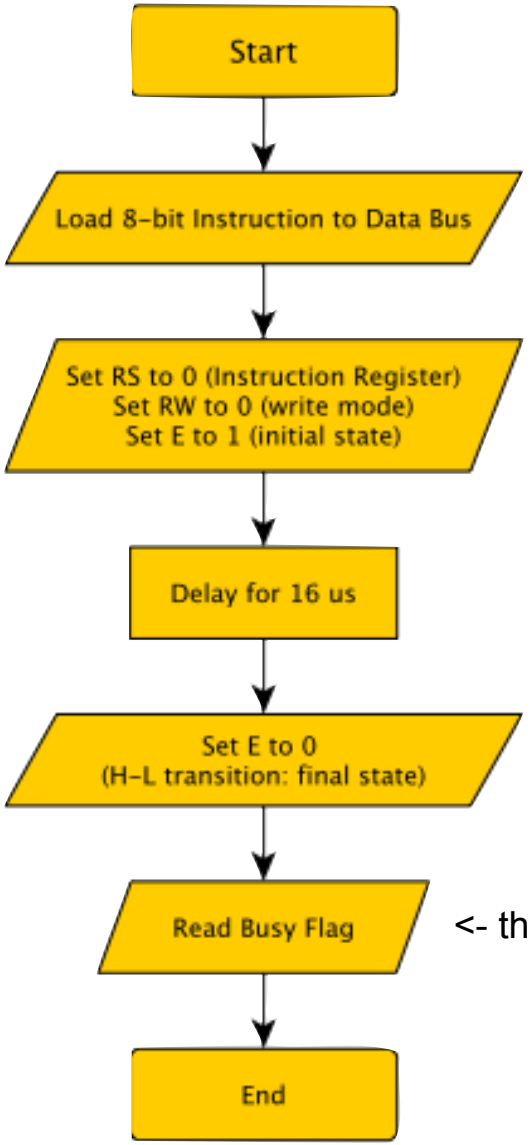

<- this operation is optional

Flowchart for ***instCtrl()*** function

The flowchart for **dataCtrl()** is similar except that RS should be set to ‘1’ (data register).

LCD Initialization

The following is the **initLCD()** function. Supply the instructions for the desired configuration can be found on the LCD instruction set. All delays are approximate and can be implemented using a simple loop.

```
initLCD()
{
            delay(1000);          // LCD startup about approx 15ms
    instCtrl(__________);         // function set: 8-bit; dual-line
    instCtrl(__________);         // display off
    instCtrl(__________);         // display clear
    instCtrl(__________);         // entry mode: increment; shift off
    instCtrl(__________);         // display on; cursor on; blink off
}
```

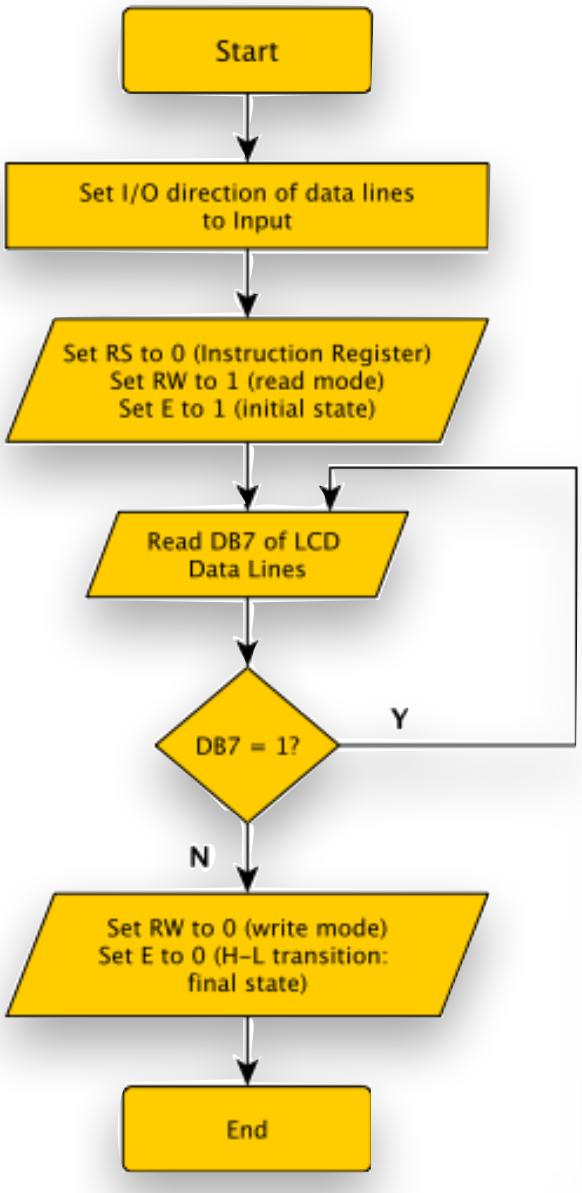

Reading the **Busy Flag***

* this operation is optional

Character Display Addresses

Line 1 (0x80 - 0x93)

Line 2 (0xC0 - 0xD3)

Line 3 (0x94 - 0xA7)

Line 4 (0xD4 - 0xE7)

Line 1 address continue to Line 3 while Line 2 continues at Line 4.

Sample Code (C)

```
instCtrl(0xC6);     // move cursor to 2nd line 7th column
dataCtrl('H');      // prints 'H' at current cursor position
                    // then shifts the cursor to the right*
dataCtrl('E');      // prints 'E'
dataCtrl('L');      // prints 'L'
dataCtrl('L');      // prints 'L'
dataCtrl('O');      // prints 'O'
dataCtrl('!');      // prints '!'
```

* assuming configuration is cursor shift right

University of San Carlos | Department of
COMPUTER ENGINEERING

CpE 3201
Embedded Systems

End of Lecture

References:

- PIC16F87X Data Sheet, Microchip Technology Inc. 2003.
- Displaytech 204A Data Sheet